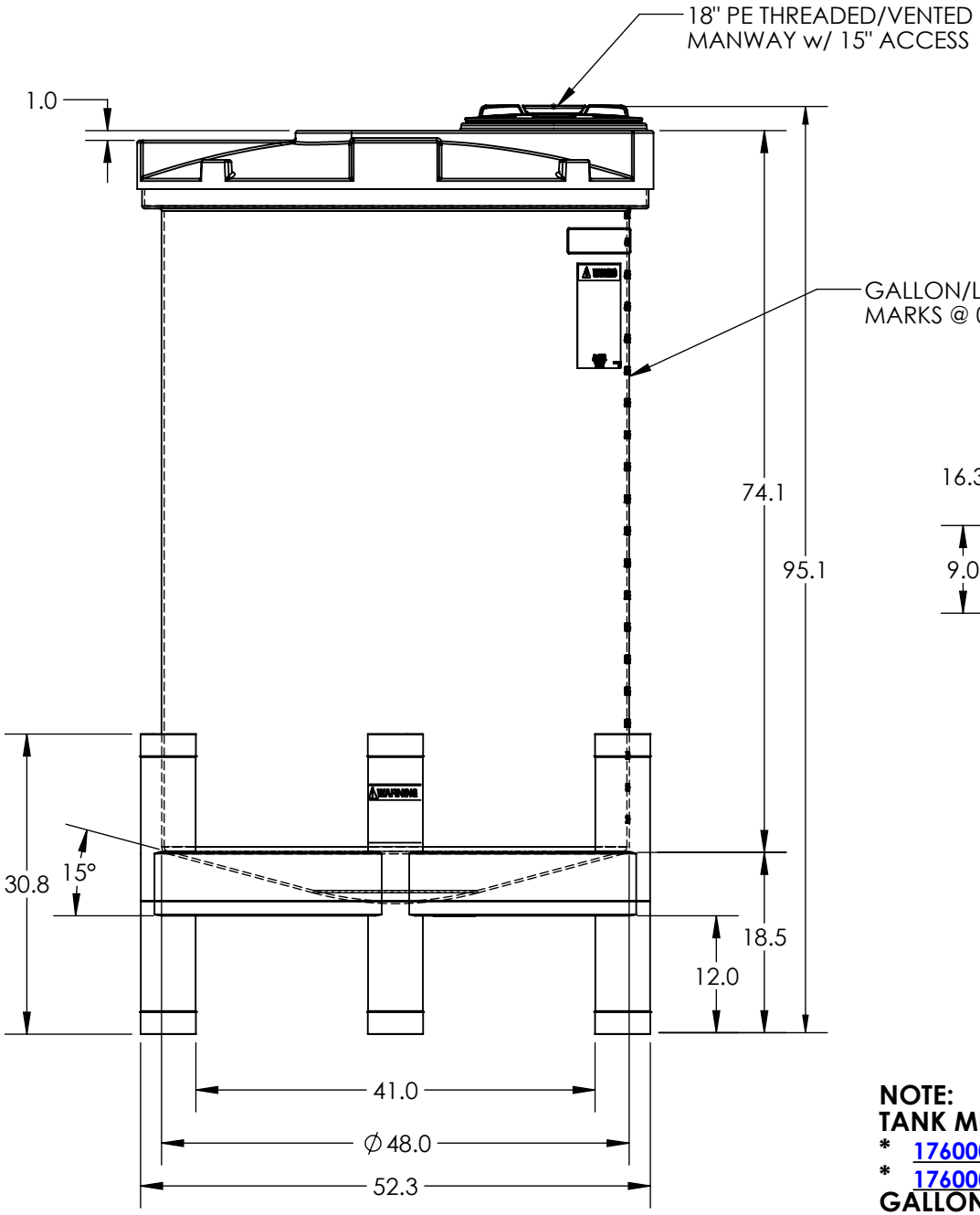

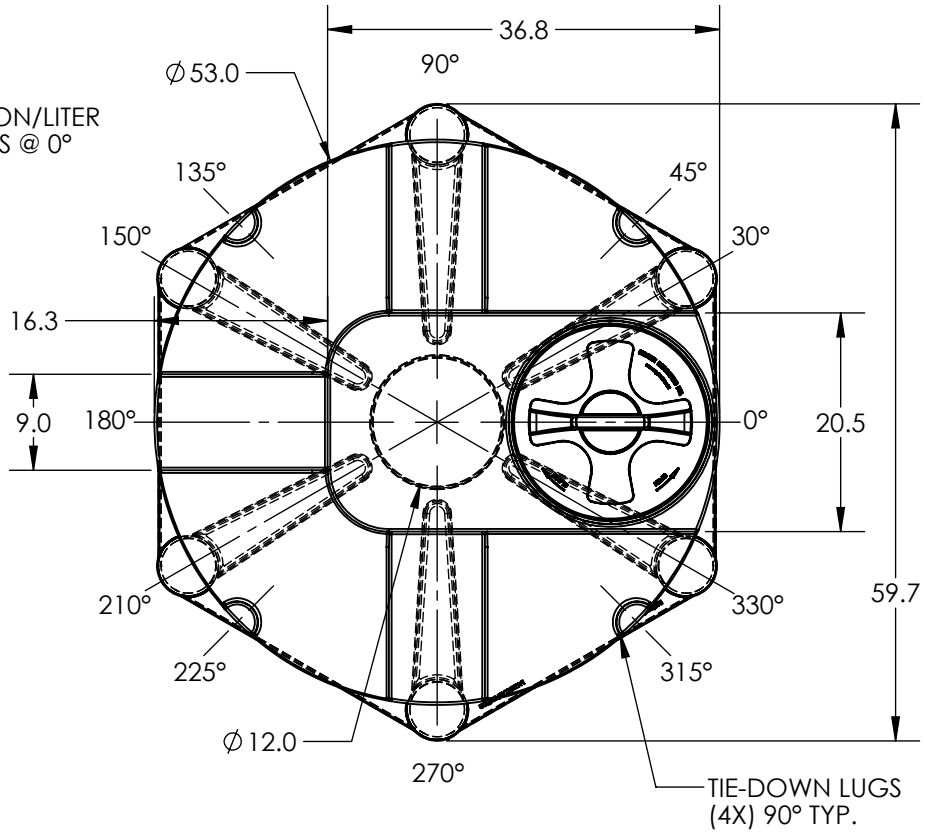

NOTE:
TANK MUST BE SOLD WITH A STAND.
*** 1760000N - 12" STAND**
*** 1760001N - 18" STAND**
GALLON MARKS CAN BE REMOVED FOR FITTING PLACEMENT AS NEEDED.

***ALL EXTERNAL PIPING MUST BE INDEPENDENTLY SUPPORTED.**
***ONLY BASE FITTINGS TO BE LEFT INSTALLED AT TIME OF SHIPMENT PER SII PROCEDURE.**
***TANKS ORDERED WITH FOAM INSULATION WILL HAVE AN INCREASED DIAMETER OF 4-6 INCHES.**
***Consult Snyder's Guidelines for Use and Installation prior to delivery.**
Available on-line at http://www.snyderindustriestanks.com/Technical
ALL DIMENSIONS ARE IN INCHES, NOMINAL, & SUBJECT TO CHANGE WITHOUT NOTICE.
ALL DIMENSIONS ON ROTATIONAL MOLDED PARTS ARE SUBJECT TO A ± 3% TOLERANCE.

DO NOT SCALE	DRAWN BY		TITLE:	REVISION
STATUS: Released	IGG	SNYDER INDUSTRIES	ASM TK 500VNT X 48 TD W/ 12" STAND	B
				SHEET 1 OF 1
© SNYDER INDUSTRIES, LLC, 2019			PART NO. 5780101N & 1760000N	ENG. ID. A002681
ALL DIMENSIONS, DESIGNS, AND INFORMATION ON THIS PRINT MUST BE CONSIDERED PROPRIETARY TO SNYDER INDUSTRIES, LLC, AND MAY NOT BE USED, COPIED, OR DISTRIBUTED WITHOUT WRITTEN PERMISSION OF AN OFFICER (OR HIS AGENT) OF THE FIRM.		(402) 467-5221 www.snydernet.com		